• Installation and wiring of luminaire must be in accordance with all applicable local codes.
• Installation, inspection, and maintenance of luminaires should be performed by a qualified electrician.
• DO NOT make or alter any open holes in the luminaire. Do not modify the luminaire.
• DO NOT install damaged product.
• Make sure electrical power is OFF before and during installation and maintenance.
• Make sure the equipment is properly grounded.
• Make sure the supply voltage is same as the rated fixture voltage.

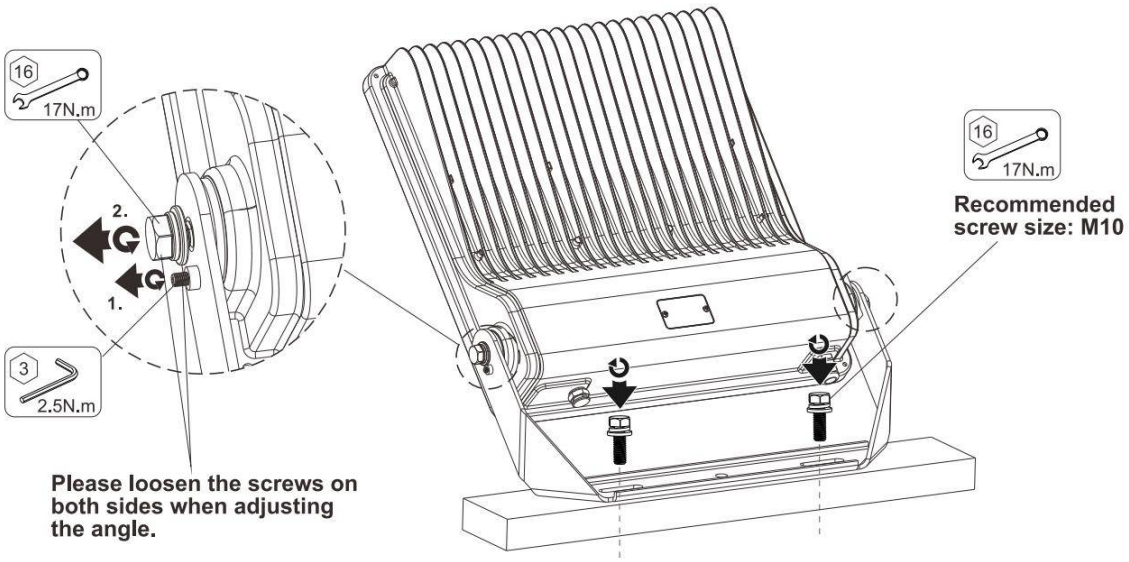

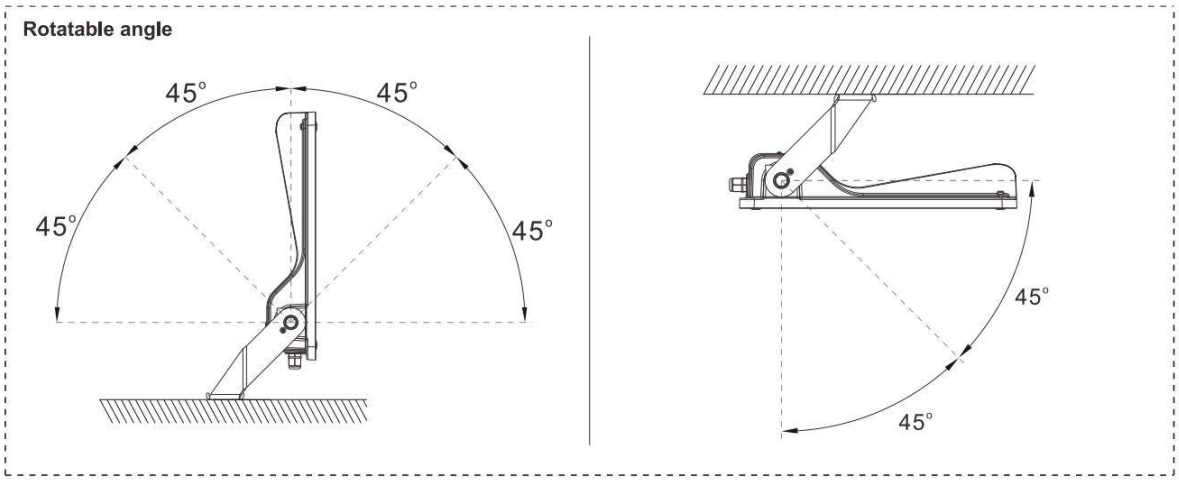

AC cords

L	brown		black
N	blue		white
⏚	yellow/green		green

DIM cords

Note: color for dim cords subject to the cable label on luminaire

Warning! Do not wire dim cord to high voltage,or dim function will fail.

Reminder

We appreciate your purchase!
Please read the entire instruction manual before installation and keep it for future reference.
1.Please do not modify or dismantle the luminaire or replace accessories without confirming with the supplier first.
2.Please authorize only qualified personnel to install the lamp and ensure they follow the instruction manual. Any improper installation might cause falling, electric shock, fire, or other injury, damage or hazard.
3.Please disconnect power before installation or any maintenance of the lamp. Do not touch the power supply when the lamp is operating.
4.If the luminaire begins to smoke or emit odors, please disconnect power since fire or electric shock may occur. And ask qualified person to inspect and maintain the luminaire.
5.If the external flexible cable or cord of this luminaire is damaged, it shall be exclusively replaced by the manufacturer or his service agent or a similar qualified person in order to avoid a hazard.
6.The light source contained in this luminaire shall only be replaced by the manufacturer or his service agent or a similar qualified person.
7.We suggest you adding a separate surge protection device in distribution box to extend luminaire lifespan.

Applications

1.The product is designed for recreational sports (tennis courts, basketball courts…), exhibition center, shopping mall, stadium, accent lighting, parking lots, coastal areas, fishing boat and similar applications. For other special applications, please consult your salesperson to confirm firstly.
2.Too much dust or oil accumulation on PC lens will stop the lighting emit and heat dissipation, it will change lighting distribution, and cause high heat inside to affect LED chips performance. For such environments, we suggest you to clean the luminaire regularly to ensure longer lifespan. Or you need to use product with glass cover and better heat performance instead.
3.The suggested mounting height of the luminaire is 3-25 m.